Honest Structures

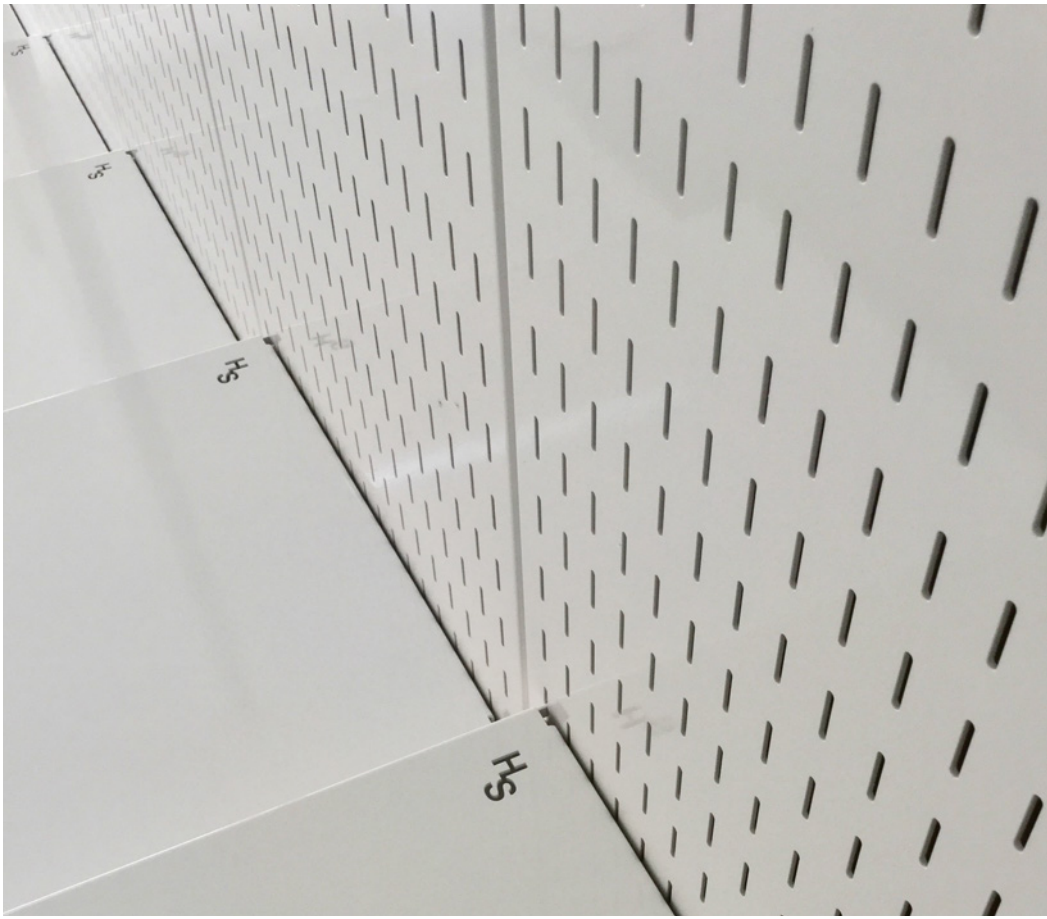

# Wall System

# HS Wall System

HS Wall System floats cleanly above the floor.

Visually light. Incredibly useful. Great for books and vinyl, a personal stereo, museum displays, favorite design objects, bags of coffee, clothes and tchotchkes, modular workstations, medical supplies, lab and workshop equipment.

Make what you want, just how you want it. Reconfigure anytime, no tools required.

Use everywhere, everyday. Guaranteed for life.


- Materials & Colors, Specifications Page 9
- Re-use, Refurbish, Recycle Page 13
- Wall System Components Page 15
- Wall System Applications Page 33

HS

BLUE
TOKAI
COFFEE
ROASTERS
ATTIKAN ESTATE

# Materials & Colors

## STRUCTURE

Material / Laser-cut 2mm CRCA Steel
Color / RAL 9003 Signal White
Color / RAL 2002 Calder Flamingo Red
Color / RAL 7021 Mies Grey
Standard Finish / High-gloss
Pure Polyester color-coat + Epoxy base-coat

## SHELVES, COMPONENTS in STEEL

Material / Laser-cut 2mm CRCA Steel
Color / RAL 9003 Signal White
Color / RAL 2002 Calder Flamingo Red Orange
Color / RAL 7021 Mies Grey
Standard Finish / High-gloss
Pure Polyester color-coat + Epoxy base-coat

## COMPONENTS in Compact Lam / Richlite™

C.Lam is a solid resin and paper composite. Cool and smooth to the touch, C.Lam is tough, and virtually impervious to everyday use.

Thickness / 25mm, 18mm, 16mm, 12mm
Color / Richlite Grays Harbor / Dark Grey
Color / Richlite Browns Point / Deep Brown
Color / Richlite Maple Valley / Light Brown

## OPTIONS

System in Stainless Steel 304.
System in Stainless Steel 316.
Custom colors for Steel elements.
Custom C.Lam colors and finishes.
Custom edge profiles for C.Lam tabletops.
Client-specified / Client-supplied tabletops.

## NOTE

The Richlite variants we use derive their color from the tints of the paper and resins they are made of. We do not use additional colors, dyes or finishes for Richlite tabletops.

RAL 2002 Calder Flamingo Red

RAL 7021 Mies Grey

Richlite Grays Harbor / Dark Grey

Richlite Browns Point / Deep Brown

Richlite Maple Valley / Light Brown

# Sizes & Specifications

## ACTUAL vs. NOMINAL SIZES

Raw materials are made in standard sizes, such as 4'X8'. When machined to a tabletop, the resulting size is a bit smaller, 3'10"X7'10".

- 3'10"X7'10"is the actual size
- 4'X8' is the nominal size.

Since it is easier [and quicker] to think in terms of whole numbers rather than fractions, we typically mention nominal sizes / dimensions. This is also standard practice across the architecture and building industry.

Please enquire ahead of time whenever dimensions are super critical.

## SPECIAL SIZES FOR SPECIAL PROJECTS

For special projects, or large projects, it is possible for us to have raw materials manufactured in larger sizes, smaller sizes, or more efficient sizes. Please enquire.

contact@honeststructures.com

## CHANGE FOR THE BETTER

HS refines product designs to make them better. As such, details on the same products may vary from one batch to the next, especially over extended periods of time.

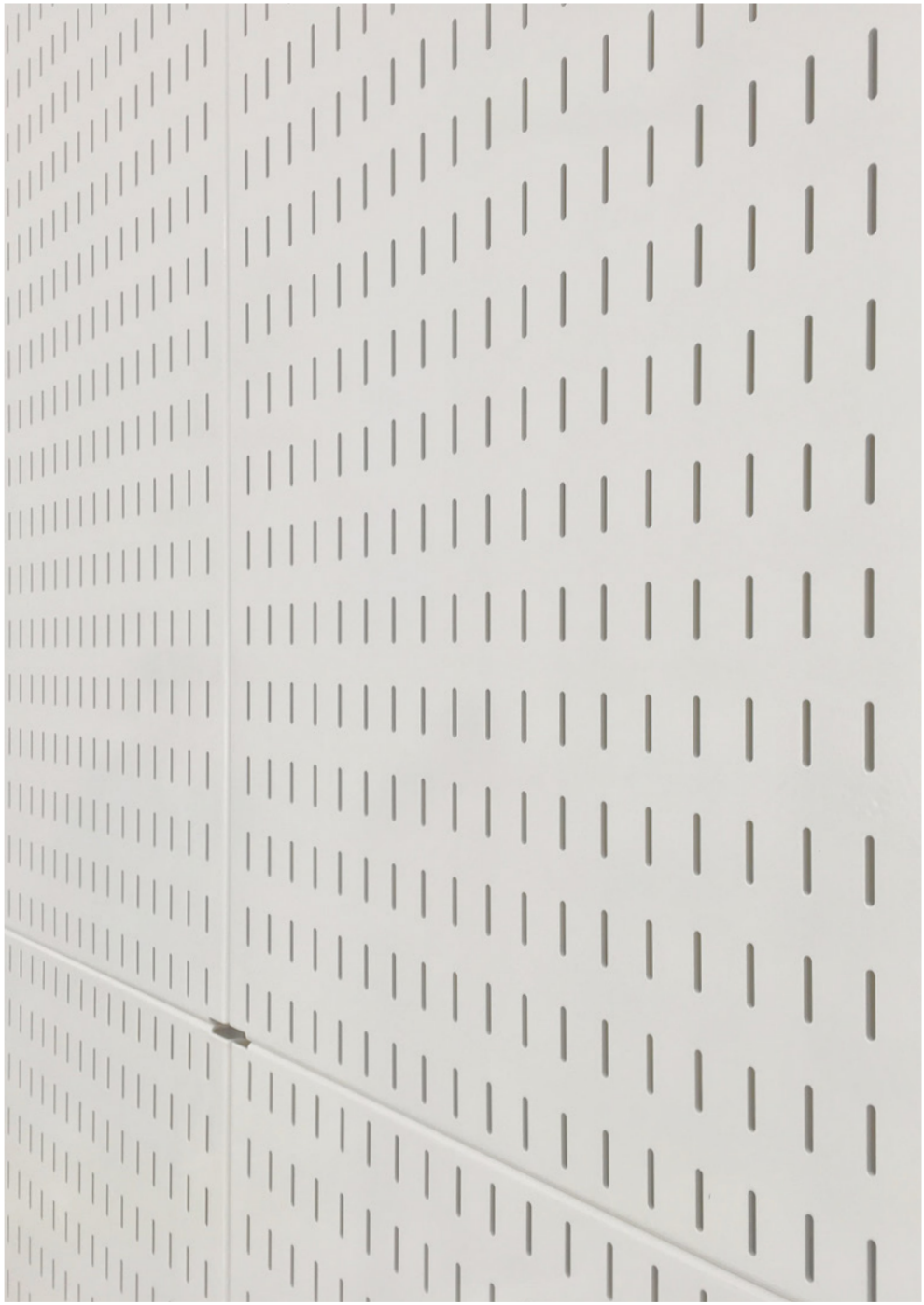

# Re-use, Refurbish & Recycle

OVERVIEW

HS Products are Guaranteed for life.

This means that they're designed and made to last forever with regular use [not abuse].

We all know that things happen and sometimes products are damaged. What then?

1. RE-USE / HS products are engineered to be taken apart without tools. They are modular in design, and they are assembled without welds or glues. Replace a damaged part with a new one, re-use the rest, and you're done.
2. REFURBISH / Through heavy use, products can get scuffed up. Or maybe you'd like your table in a new color after a few years? We can refinish steel components at any time, and replace Richlite and plywood tops.
3. RECYCLE / If any parts are impossible to salvage, they can be cleanly recycled. Steel components are recycled into new steel, Richlite can be sent back to the manufacturer and turned into new material.

# System Components

HS Wall System has 4 types of components:

- Wall Panels
- [OPEN] Shelves, Trays, Bins
- [ENCLOSED] Box Units
- Small Elements: Hooks, Hangers, Other Bits

In addition, custom components are also possible for reasonably-sized orders.

Custom can mean taller / shorter / wider / narrower versions of standard components, custom-sized and shaped components, custom configurations, and customized with your logo.

# HS Wall System
# Wall Panels

## OVERVIEW

Wall Panels are the heart of the HS Wall system.

Once installed, they hold all other components: small and large shelves, bins, trays, enclosed box-units with sliding doors, hooks and hangers.

Any combination of panels [short, medium, tall] can be used in a single installation.

## DIMENSIONS

Width: 450mm / 18”

440mm / 17”

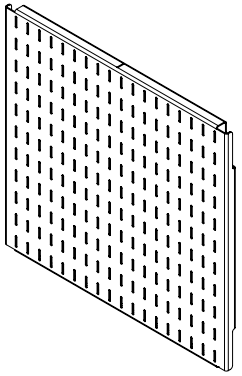

830mm / 33”

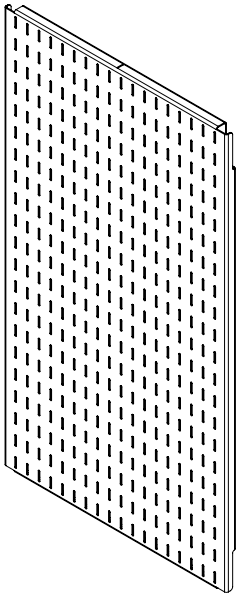

1000mm / 40”

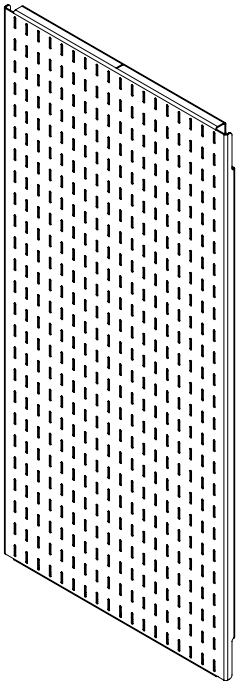

## OPTIONS

Components in Stainless Steel 304.
Components in Stainless Steel 316.
Custom colors.
Custom heights and widths.
Personalized with your logo.

# HS Wall System
# Shelves
# 1-Panel Wide

## OVERVIEW

The most used elements of the HS Wall system.

Convenient and quick. Available in these variants:

- Minimal edge [shows 2mm Steel thickness]
- Tray type with upturned edge

## DIMENSIONS

Shelf Width: 420mm / 17”

Tray Depth: 300mm / 12”

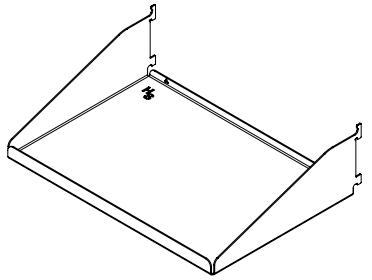

Shelf Depth: 300mm / 12”

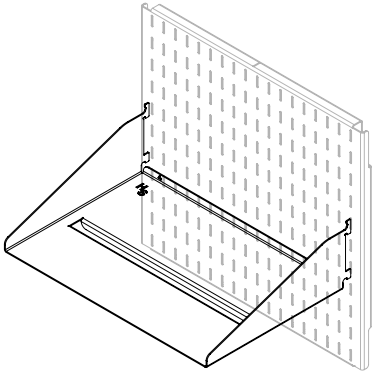

Shelf Depth: 400mm / 16”

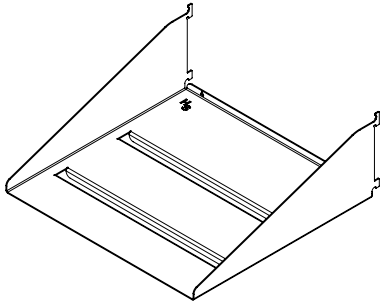

## OPTIONS

Components in Stainless Steel 304.
Components in Stainless Steel 316.
Custom colors.
Custom heights and widths.
Personalized with your logo.

# HS Wall System
# Shelves
# 2-Panels Wide

## OVERVIEW

The most used elements of the HS Wall system.

Convenient and quick. Available in these variants:

- Minimal edge [shows 2mm Steel thickness]
- Tray type with upturned edge

## DIMENSIONS

Shelf Width: 900mm / 36”

Shelf Depth: 300mm / 12”

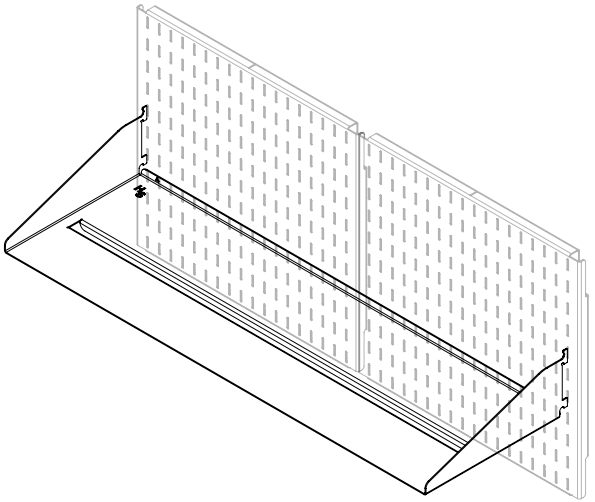

Tray Depth: 400mm / 16”

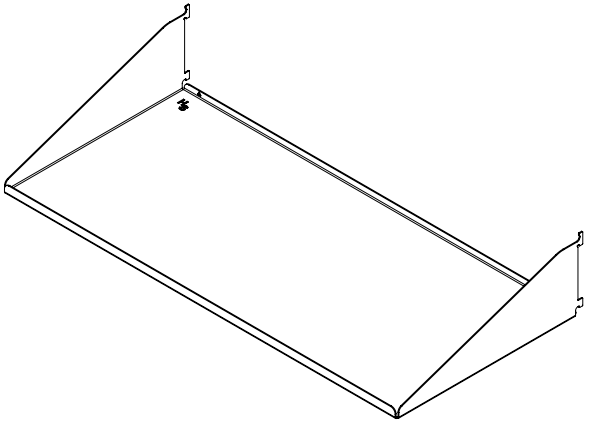

Shelf Depth: 400mm / 16”

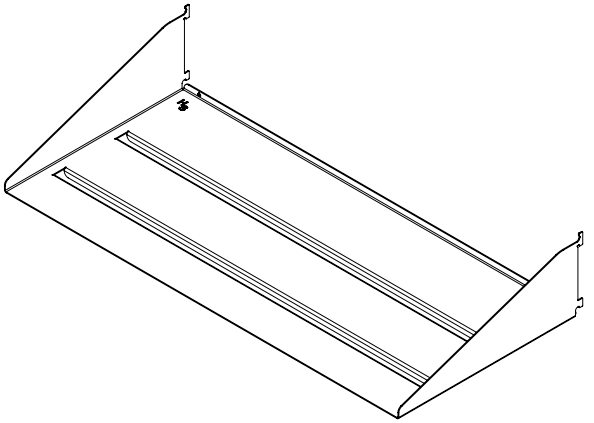

## OPTIONS

Components in Stainless Steel 304.
Components in Stainless Steel 316.
Custom colors.
Custom heights and widths.
Personalized with your logo.

# HS Wall System
# Custom Shelf Brackets

## OVERVIEW

For applications that require custom shelf materials such as wood, plywood, or C.Lam.

Many lengths are possible: from less than 1-Panel wide, to greater than 2-Panels wide. Length depends on architectural design, sizes available in the raw materials desired, and on anticipated shelf loading requirements.

Bracket Depth: 300mm / 12”

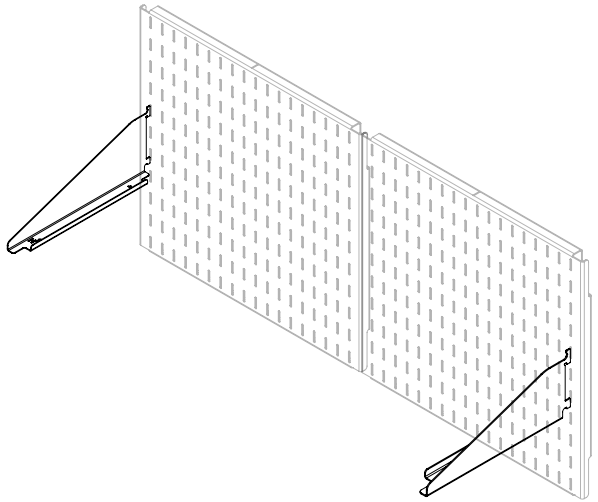

## OPTIONS

- Components in Stainless Steel 304.
- Components in Stainless Steel 316.
- Custom colors.
- Custom heights and widths.
- Personalized with your logo.

# HS Wall System
# Tabletops
# 1-Panel & 2-Panels Wide

## OVERVIEW

Smooth steel tops with softly downturned edges on all sides.

Perfect as a personal desk with a laptop, books and office supplies, a place for tinkering, to hold prized possesions, maybe a nice stereo and a TV, tools and material samples, house plants.

## DIMENSIONS

1-Panel Width: 420mm / 17”
2-Panel Width: 900mm / 36”

Depth: 400mm / 16”

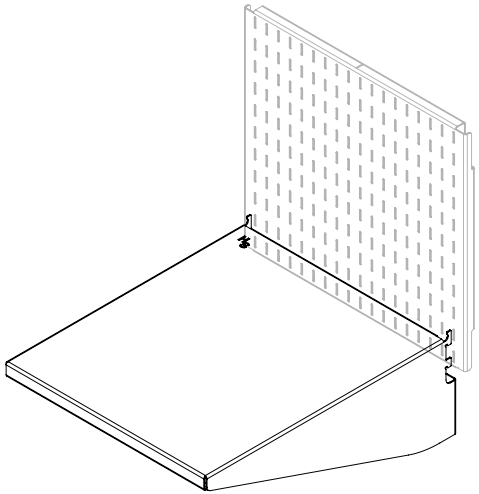

Depth: 400mm / 16”

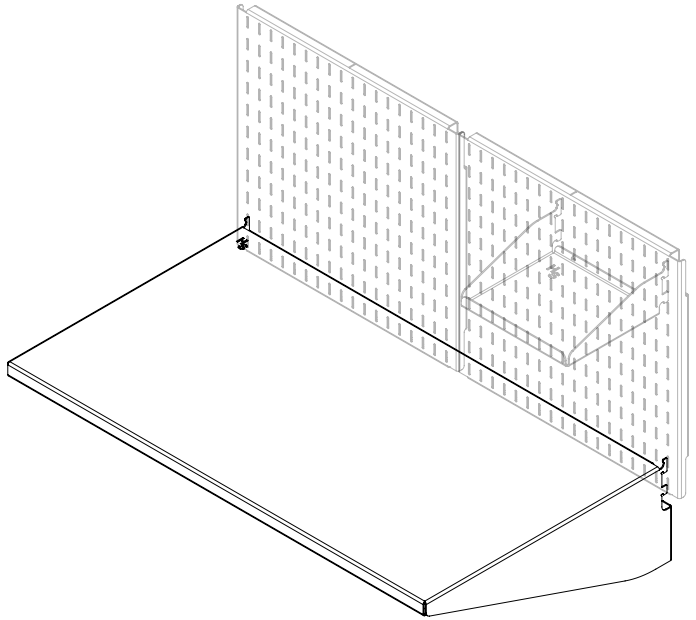

## OPTIONS

Components in Stainless Steel 304.
Components in Stainless Steel 316.
Custom colors.
Custom heights and widths.
Personalized with your logo.

# HS Wall System
# Box Unit
# 2-Panels Wide

## OVERVIEW

Enclosed storage with sliding shutters.

Shutters available in C.Lam and Birch Plywood.

Holds everything that you wouldn't want out in the open: electronics and spare parts, extra printer paper, catalogs, power supplies, material samples, a bike helmet, bottles and glassware.

## DIMENSIONS

2-Panel Width: 900mm / 36"

Depth: 400mm / 16"

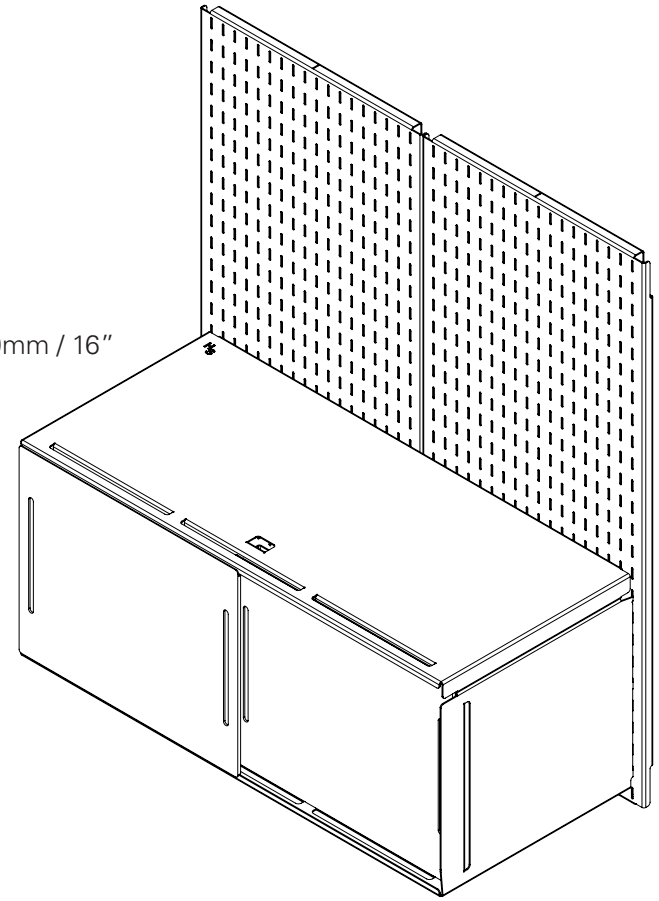

Height: 375mm / 15"

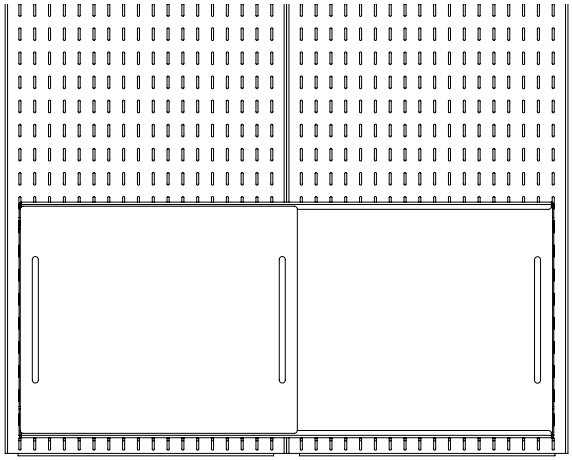

## OPTIONS

Components in Stainless Steel 304.
Components in Stainless Steel 316.
Custom colors.
Custom heights and widths.
Personalized with your logo.

# HS Wall System
# Hooks, Small Trays, Hangers, Rounds & Other Small Bits

## OVERVIEW

Small elements which add interest and utility to any installation.

Hooks to hold a scarf, a bag, a camera or a key.

Small trays and baskets for charging a phone, organizing pens, markers, bottles, small stuff.

Hanger Bars for coats and clothes in closets or a personal workspace, also perfect for displaying books, newspapers and magazines.

Small and Large Rounds that hold post-it notes, favorite photos, reminders and task-lists, maybe a friendly sketch - it's your own personal spot.

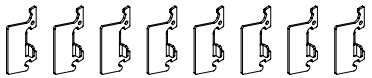

Hooks Height: 60mm / 2"
Hooks Depth: 30mm / 1"

## DIMENSIONS

Individual parts as marked.

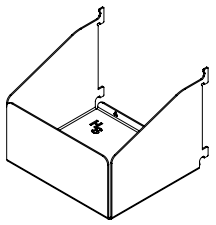

Basket Width: 200mm / 8"
Basket Depth: 175mm / 7"

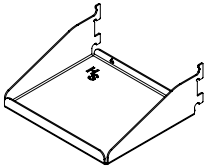

Small Tray Width: 200mm / 8"
Small Tray Depth: 175mm / 7"

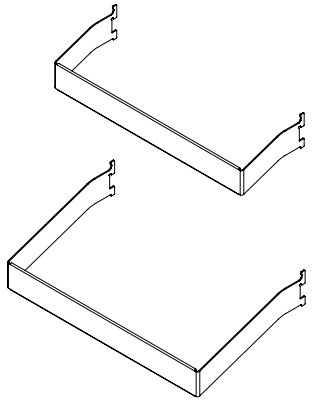

Hanger Width: 420mm / 17"
Hanger Depth: 140mm / 6"
Hanger Depth: 235mm / 9"

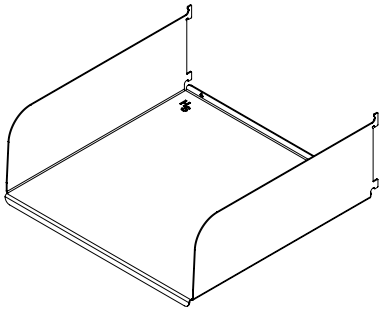

Half Box Width: 420mm / 17"
Half Box Depth: 400mm / 16"

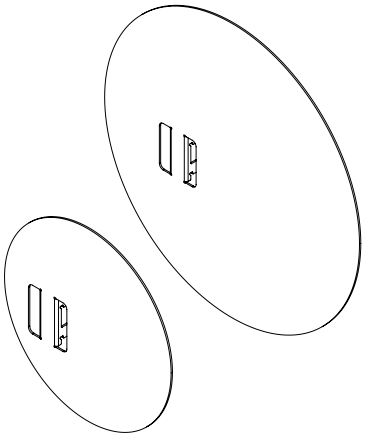

Large Round: 400mm / 16"
Small Round: 250mm / 10"

## OPTIONS

Components in Stainless Steel 304.
Components in Stainless Steel 316.
Custom colors.
Custom heights and widths.
Personalized with your logo.

# HS Wall System
# Wall Panel Mounting Strips

## OVERVIEW

Mounting strips are anchored to the wall as the first step in installing any HS Wall System. Wall panels slide onto the mounting strips via a simple, robust double interlocking detail.

Any combination of mounting strips [short, medium, long] can be used in an installation.

At least 2 mounting strips are required for a single row of wall panels: 1 strip at the top, 1 strip at the bottom.

SHORT FOR 1 PANEL : 400mm / 16”

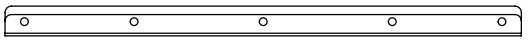

MEDIUM FOR 2 PANELS : 800mm / 32”

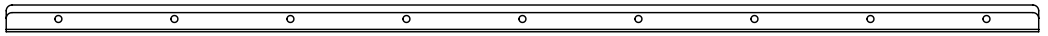

LONG FOR 3 PANELS : 1300mm / 51”

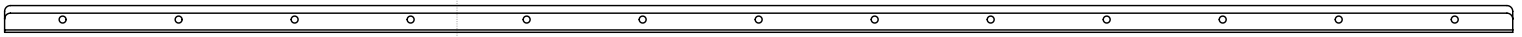

## OPTIONS

- Components in Stainless Steel 304.
- Components in Stainless Steel 316.
- Custom colors.
- Custom heights and widths.
- Personalized with your logo.

# System Applications

HS Wall System can be configured [and re-configured] for many applications.

If you can imagine it, it's probably possible.

Some examples:

- Creative Workspaces and Design Studios
- Libraries, Academic Institutions, Bookstores
- Dorms and Compact Apartments
- Ultra-Clean Medical Spaces [Stainless Steel]
- Commercial & Cloud Kitchens
- Pop-up Stores, Modern Retail Spaces
- Co-working and Co-living

KORRA
korra.in
# madeforyou

assurance as each
piece is made by a
single individual from
the start to finish
korra.in

KORRA

IN SIZE
GROZ-BECKERT

KORRA

ROAST
KORRA

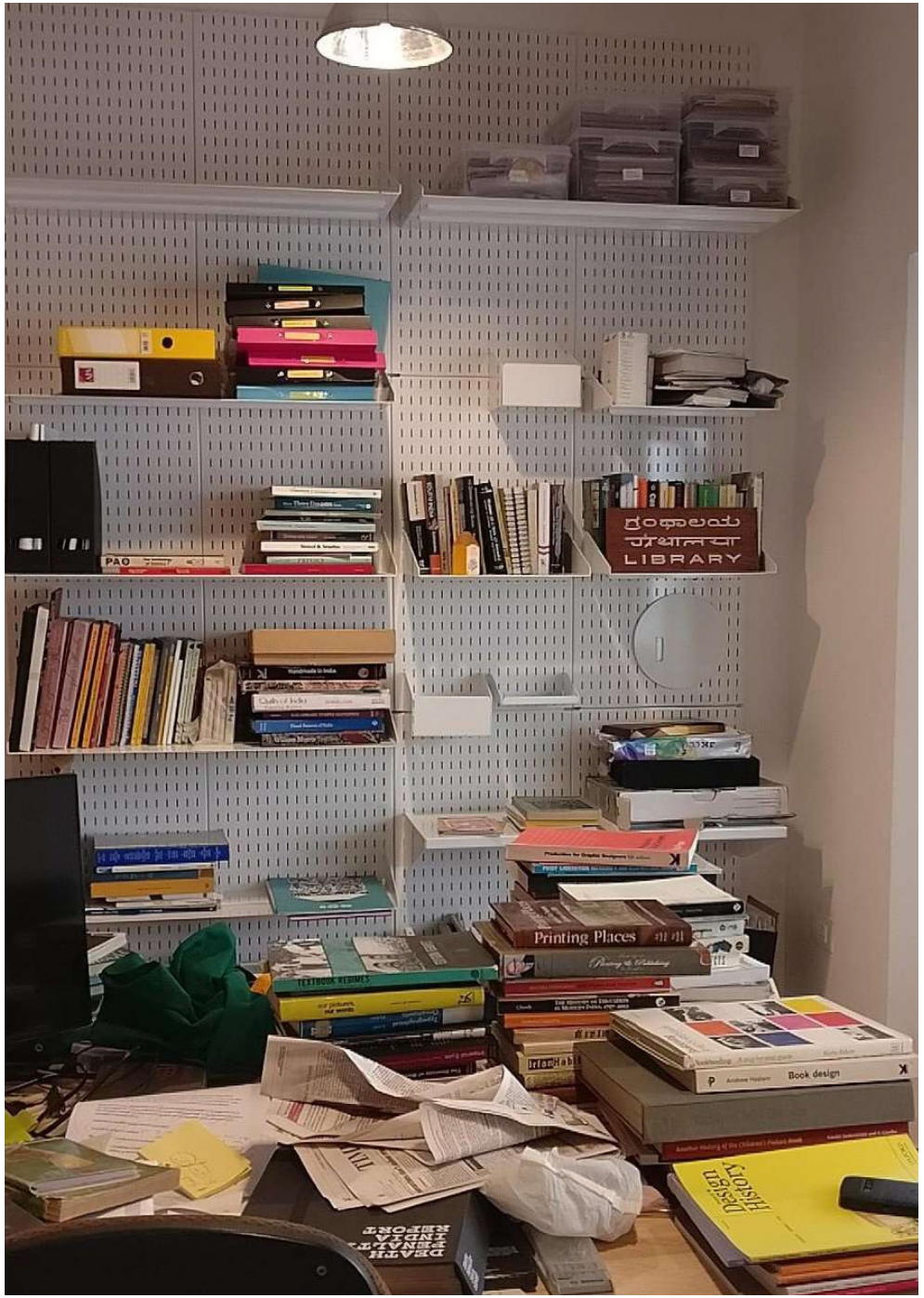

Photographs by Nia Thandapani.

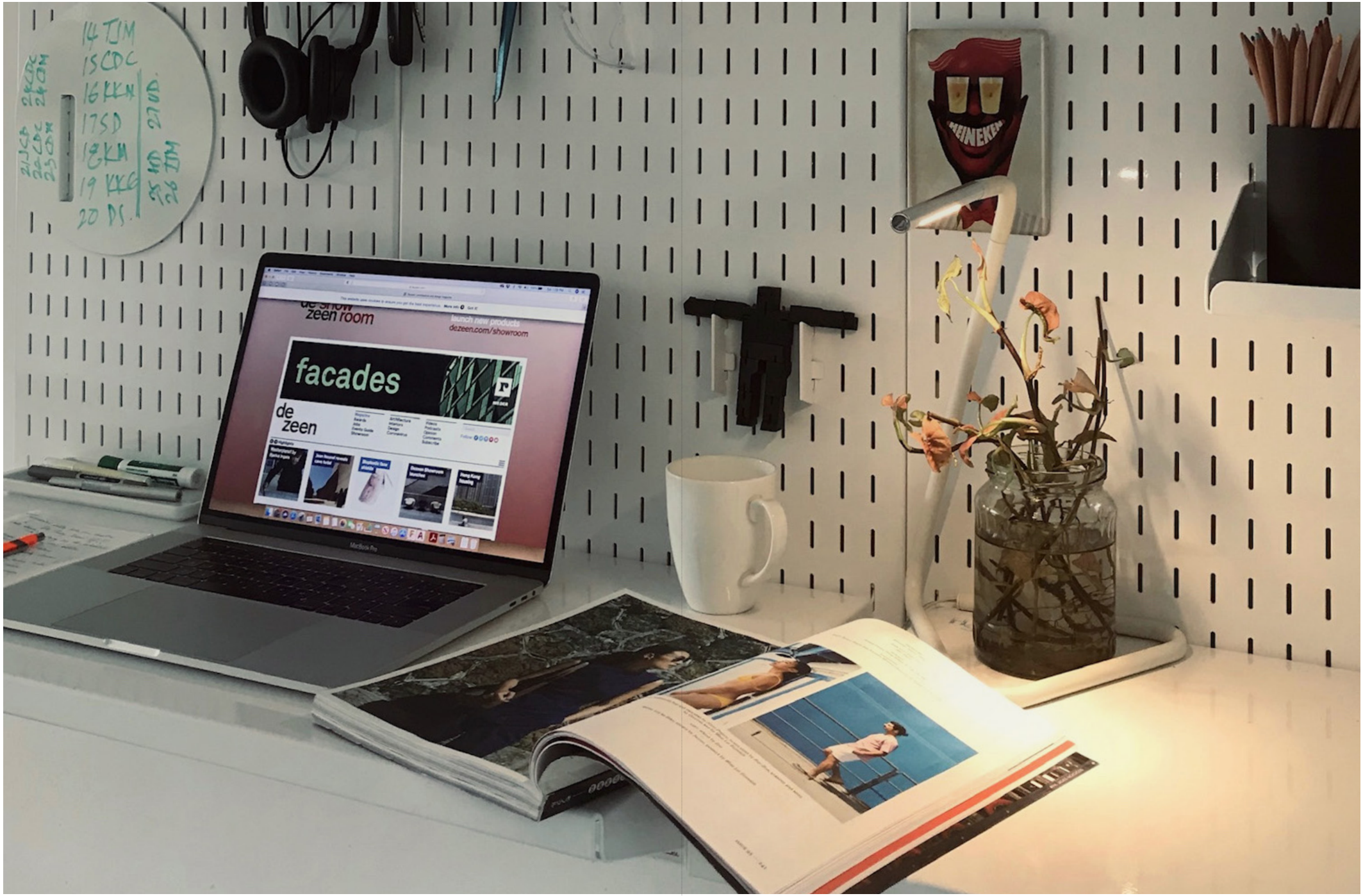
facades
de zeen
launch new products
dezeen.com/showroom
HEINEKEN

Code
FD476B
Price
INR 700

BLUE
TOKAI
COFFEE
ROASTERS
VIENNA ROAST
Arabica
Dark | Oaky
Roasted especially

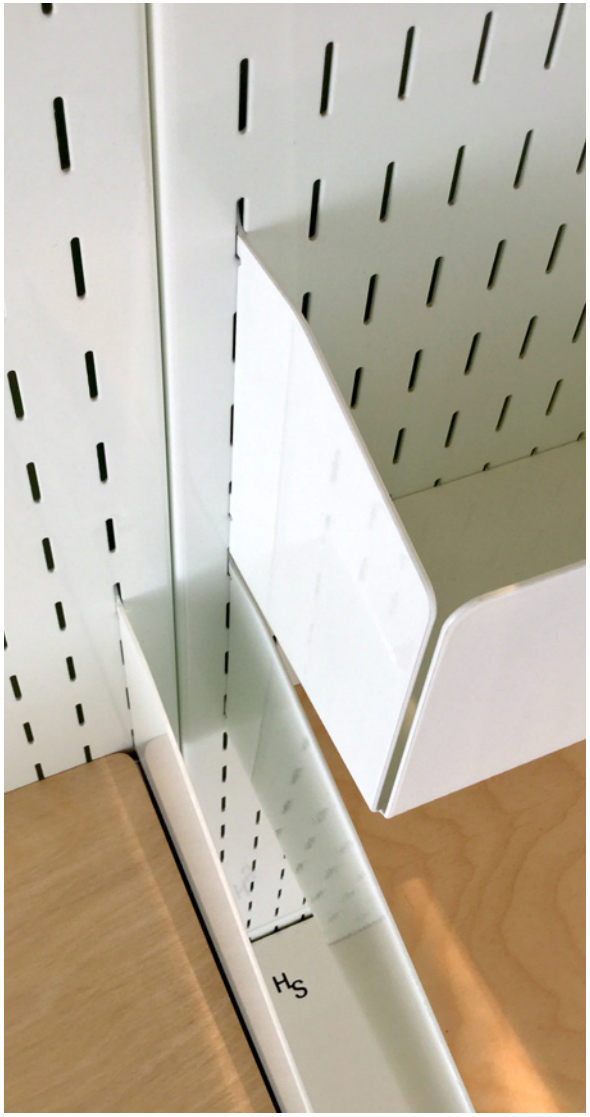
HS

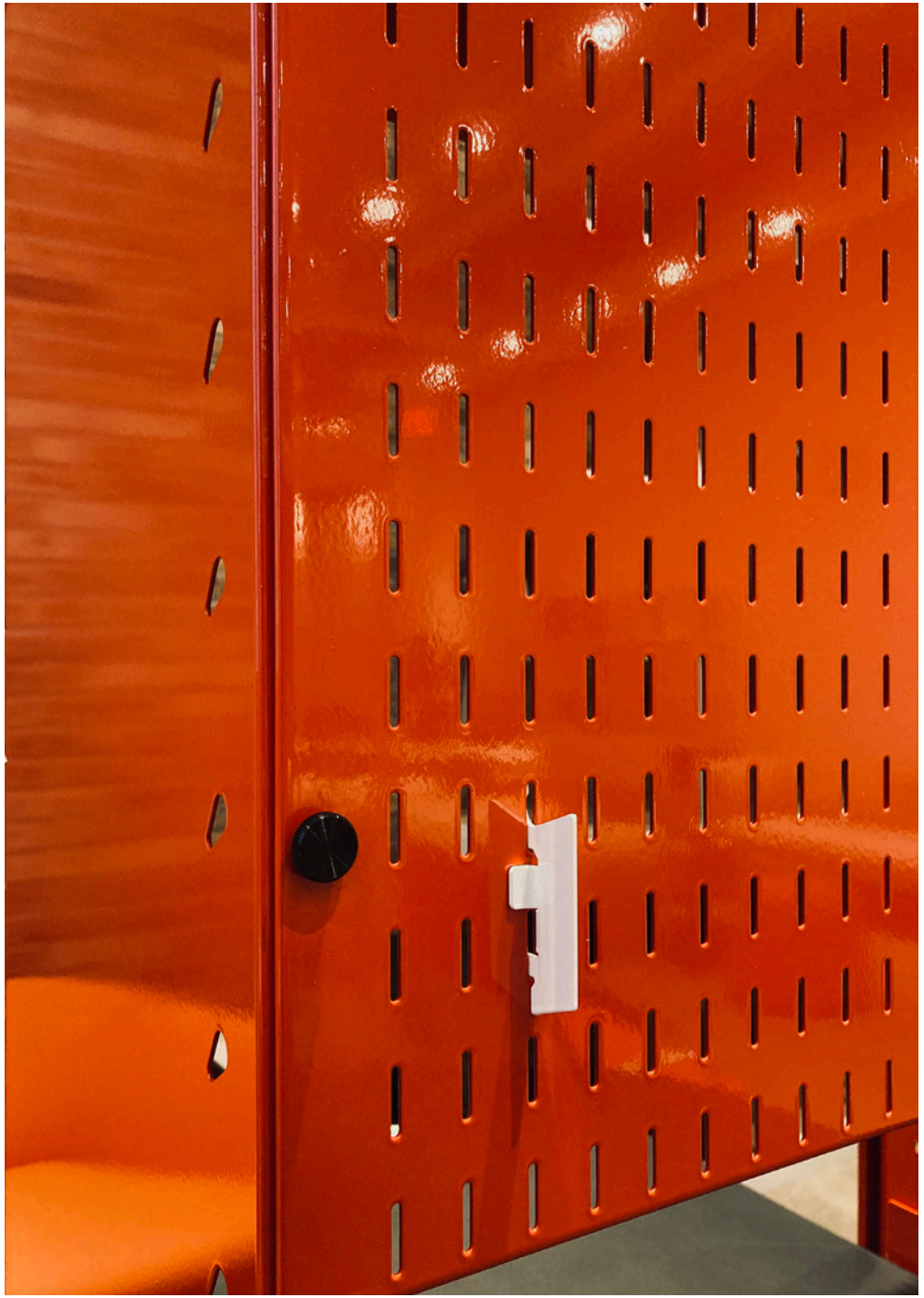

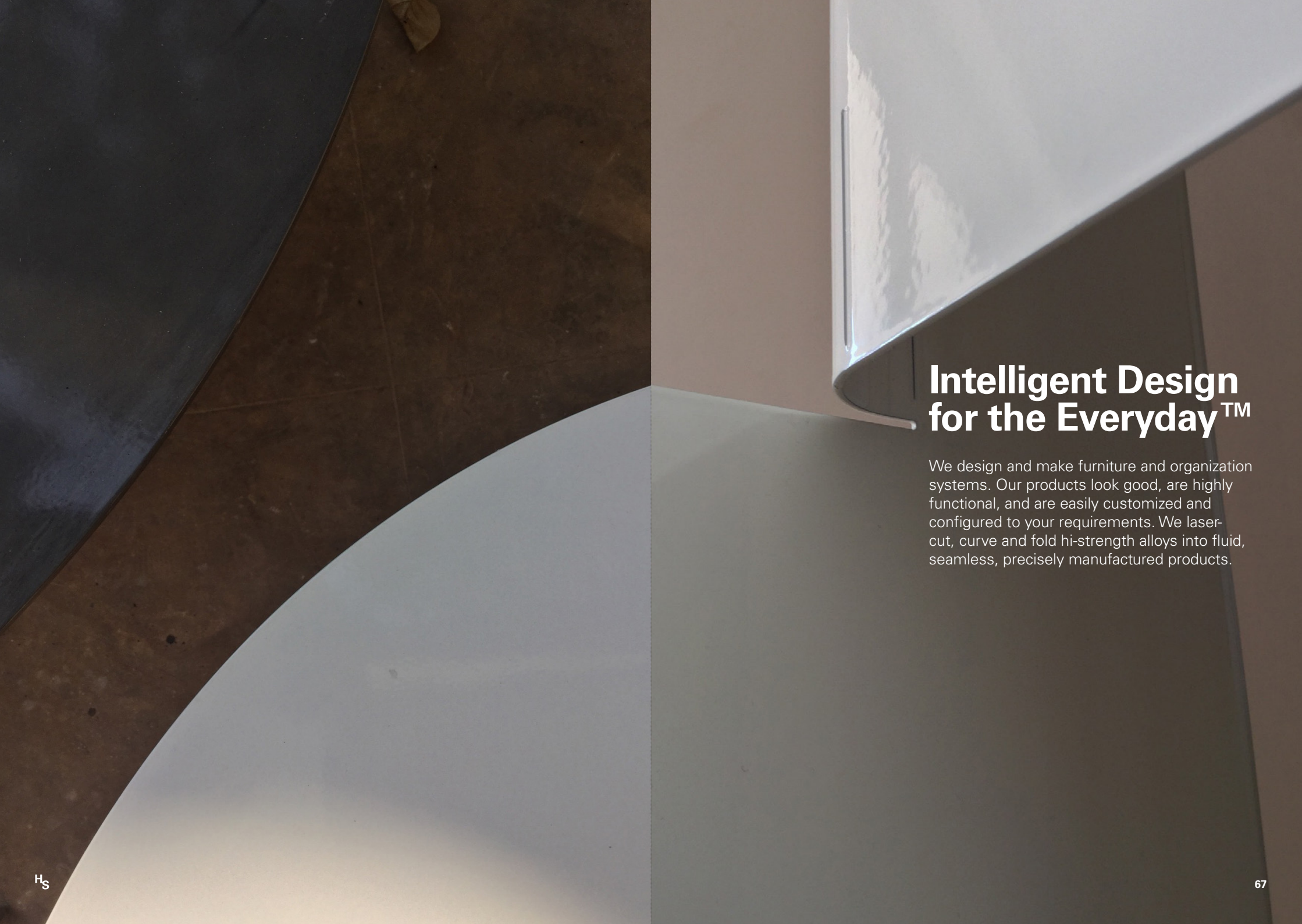

# Intelligent Design for the Everyday™

We design and make furniture and organization systems. Our products look good, are highly functional, and are easily customized and configured to your requirements. We laser-cut, curve and fold hi-strength alloys into fluid, seamless, precisely manufactured products.

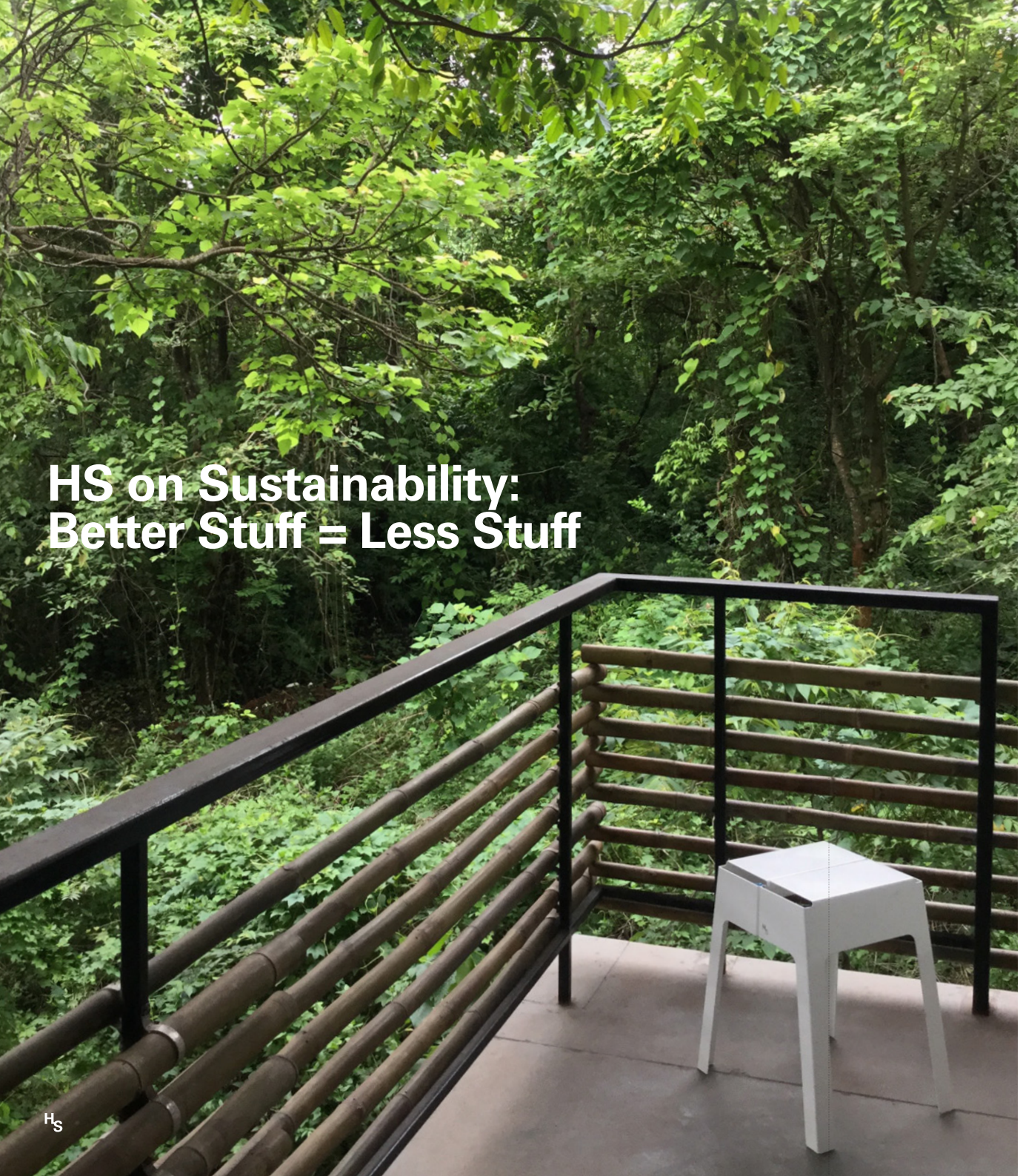

# HS on Sustainability: Better Stuff = Less Stuff

It is our belief that assuming responsibility for what we bring into the world assures best practices. Sustainability can never be a footnote. At HS, it is at the core of how we think, how we work, how we make.

We use only the finest materials to make products that can last forever. They can be refinished and refreshed whenever you'd like.

To ensure your installation looks and feels good for years [not weeks], we don't follow trends. We design original, timeless products.

Products made with mixed materials can only go into landfills. We use no mixed materials.

HS products disassemble completely as easily as they assemble, in seconds. So they are fully recyclable with very little effort.

We feel it is a more sustainable practice to buy fewer, better products. Our products are guaranteed for life.

**Beautiful and highly functional**
At HS, we believe that the beauty of a product comes from how it's made, what it's made of, what it does and how well it works. Cool to the touch, smooth, easy to clean.

**Space-saving smart investment**
Space utilization is 10-13% more efficient with modular HS system-based products. Use the extra space for greater revenue generation, or reduce built footprint and capital investment.

**Responsible**
HS makes the cleanest, most responsible line of products of their kind anywhere in the world.

**Modular and customizable**
Products across the entire HS Collection are designed to work well together. Our approach tailors products to your specific requirements. In any color. At no extra cost.

**Assembles fast, lasts forever**
HS products interlock within minutes, so you're up and running in hours, not weeks. Rather than replacements, consider a refresh or change of color. Think long-term. Invest once and done. Guaranteed for life.

All the designs and content contained here are original and therefore the property of Honest Structures. They are protected by trademarks or by patent rights or by competition laws or by copyright laws. It is forbidden to reproduce the products as well as the designs, photos, technical notes, etc. without citation of the source and without written authorization from Honest Structures.

www.honeststructures.com

HS

**Rise, sit, work, play, store, organize, make, share, display, dine, relax, recline, sleep, dream.**

**Everybody, everyday.**